CODE	ORION2 FLOWMET. 0.3/6 LT 3/4G 20B
46211AG3333	***ELECTROMAGNETIC FLOWMETERS*** **ORION 2** ***ORION 2 Electro-magnetic flowmeters with threaded coupling***

ARAG SPARE PARTS

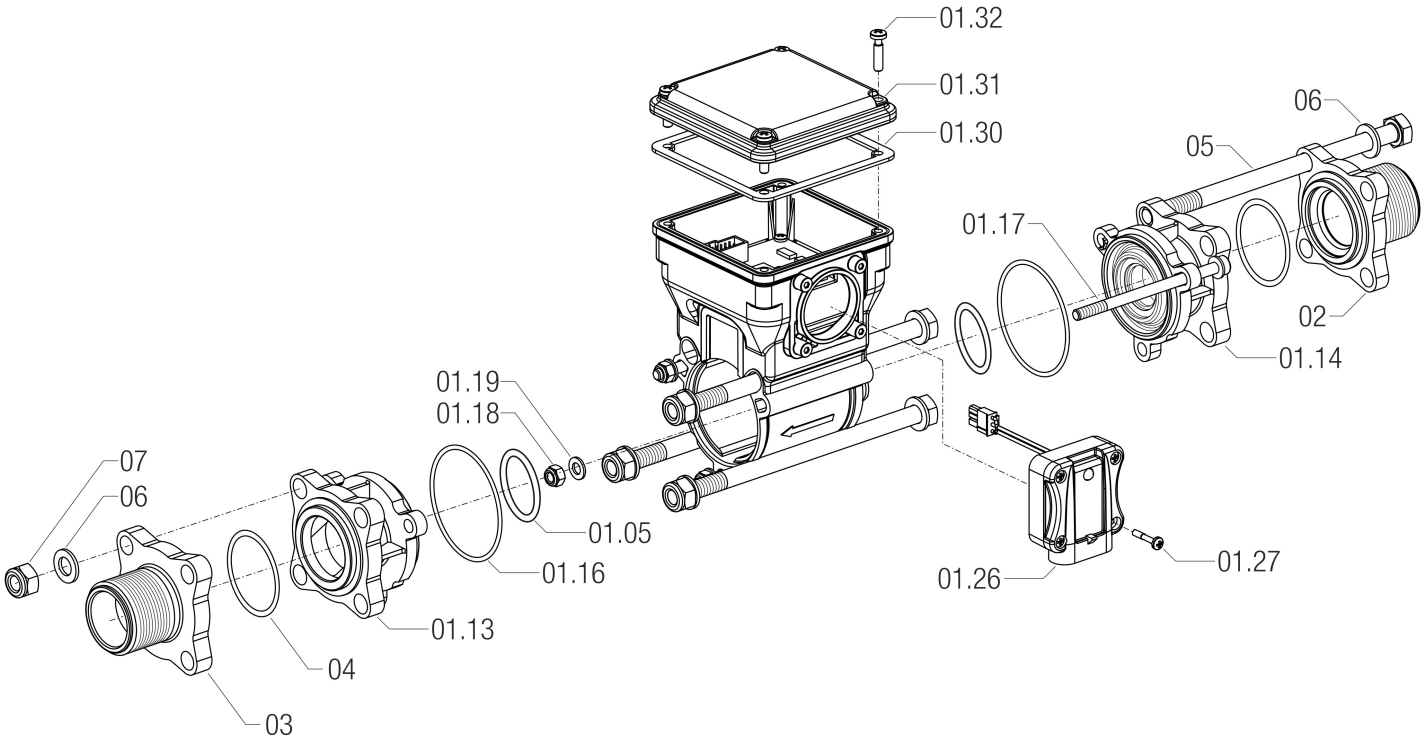

REFERENCE	CODE	DESCRIPTION
02	**463000H.030**	3/4" GAS M BRASS ADAPTOR FOR 463
03	**463000H.130**	3/4" GAS M BRASS ADAPTOR 463 TYPE F
04	**G10071V**	OR 2,62X39,34 VITON

REFERENCE	CODE	DESCRIPTION
05	**V1M258**	SCREW TE 8X140 INOX UNI 5737
06	**B202H0**	FLAT WASHER 8,4X15X1,5 INOX
07	**B12251**	SELF-LOCKING NUT M8 INOX UNI7474