CODE	2-WAYS+GENERAL +PRESSURE COMPACT CONTROL BOX (M)
46685230	***CONTROL BOXES*** **4668** *Compact control boxes*

ARAG SPARE PARTS

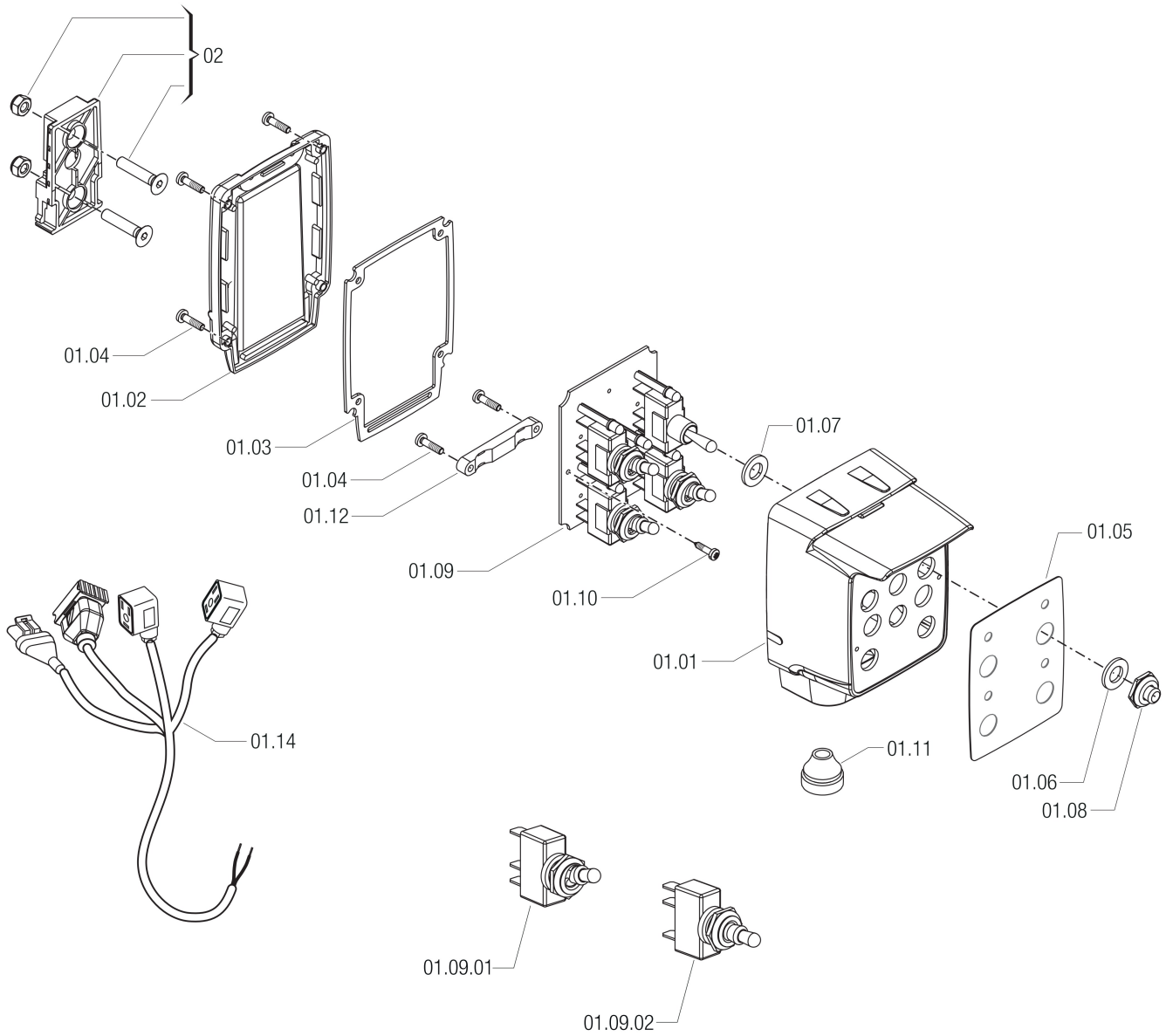

REFERENCE	CODE	DESCRIPTION
01.01	**46680000.010**	FRONT SHELL COMPACT BOX
01.02	**46680000.020**	REAR SHELL COMPACT BOX
01.03	**46680000.040**	SHAPED GASKET COMPACT BOX
01.04	**V7B23E**	SELF-THREADED SCREW 3,5X14 INOX
01.05	**46685230.030**	2W+G+P LABEL COMPACT BOX
01.06	**E000067**	FLAT WASHER 12,5X18,5X1,0 PE
01.07	**E000037**	FLAT WASHER 12,2X16,2X2,5 PA
01.08	**ESC0003**	CUT CAP SWITCH D.12

REFERENCE	CODE	DESCRIPTION
01.09	**46685230.059**	2W+G+P CIRC. COMPACT BOX (M)
01.09.01	**ESL1202**	SWITCH 1W 2P ON-ON APEM
01.09.02	**EST1301**	SWITCH 1W 3P MOM-OFF-MOM APEM
01.10	**V2B30E**	SELF THREAD.SCREW 2,2X12,7
01.11	**46680000.060**	DIAPHRAM CABLE ENTRY OF 16.5
01.12	**46680000.070**	CABLE ENTRY COMPACT BOX
01.14	**46615230.100**	2W SECT.CBL BOX 4661 GEN+PRES D.0.9
02	**467005.510**	BRACKET SUPPORT KIT